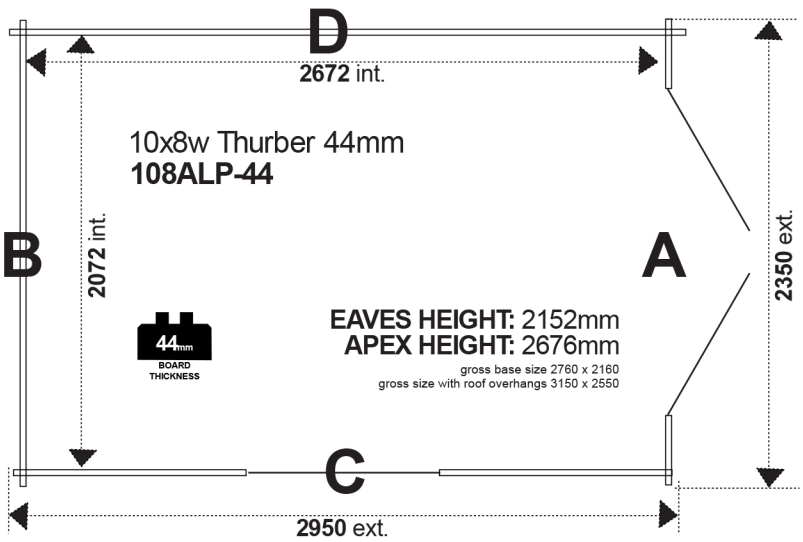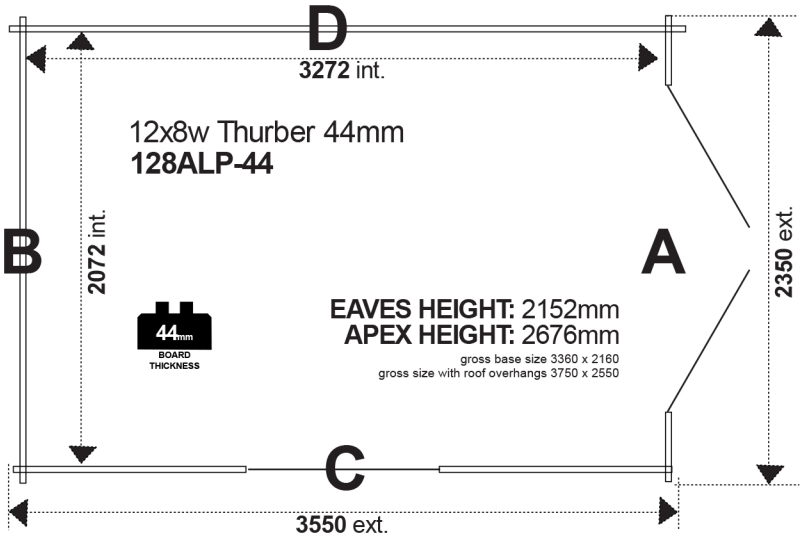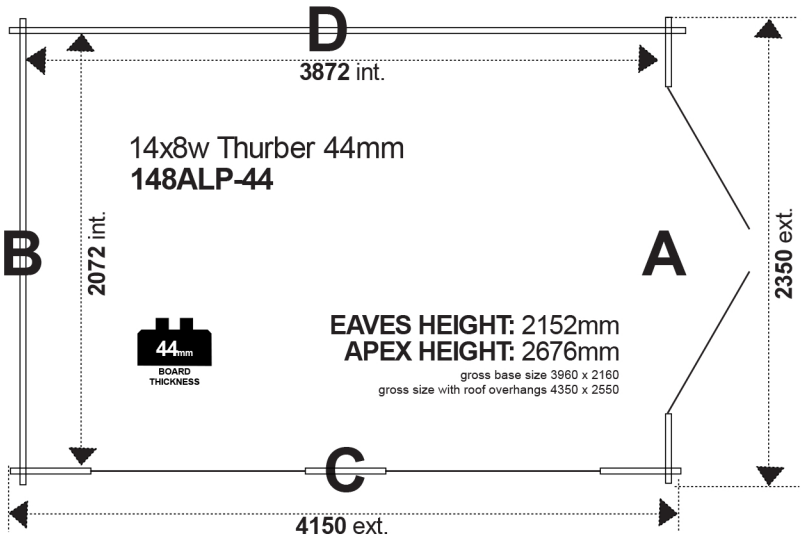The Thurber | 44mm Log Cabin Floorplans