Optima | 44mm Log Cabin Floorplans

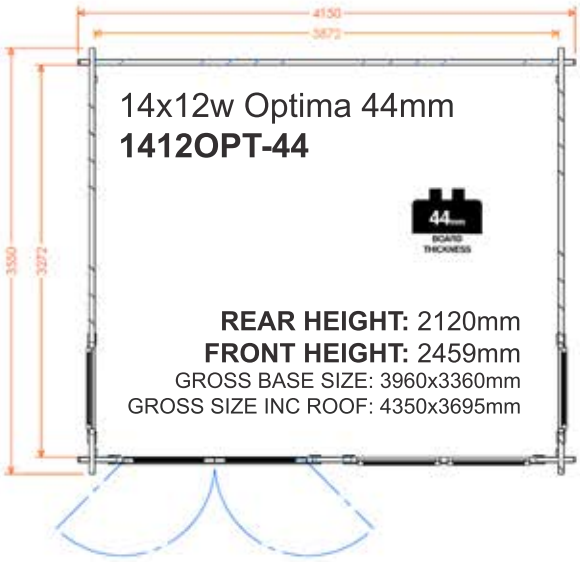

14x12w Optima 44mm
1412OPT-44

REAR HEIGHT: 2120mm
FRONT HEIGHT: 2459mm
GROSS BASE SIZE: 3960x3360mm
GROSS SIZE INC ROOF: 4350x3695mm

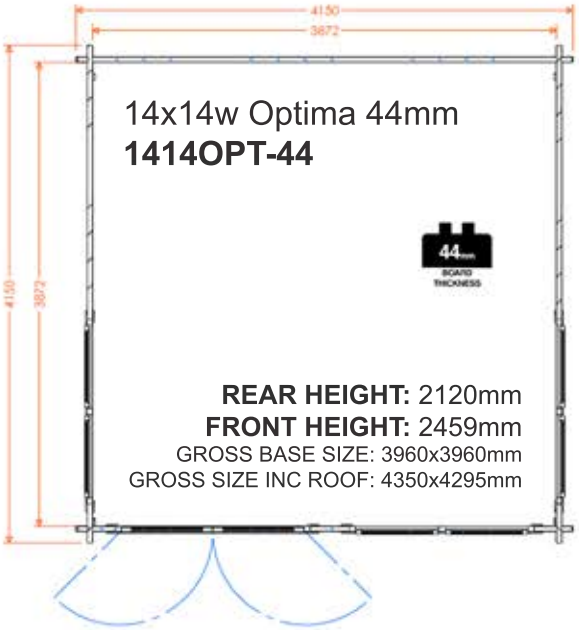

14x14w Optima 44mm
1414OPT-44

REAR HEIGHT: 2120mm
FRONT HEIGHT: 2459mm
GROSS BASE SIZE: 3960x3960mm
GROSS SIZE INC ROOF: 4350x4295mm

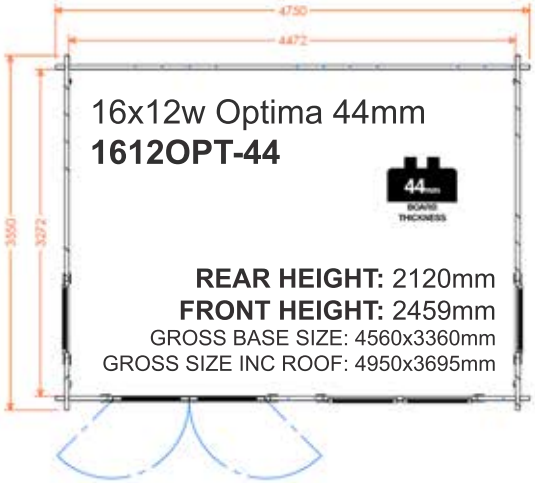

16x12w Optima 44mm
1612OPT-44

REAR HEIGHT: 2120mm
FRONT HEIGHT: 2459mm
GROSS BASE SIZE: 4560x3360mm
GROSS SIZE INC ROOF: 4950x3695mm

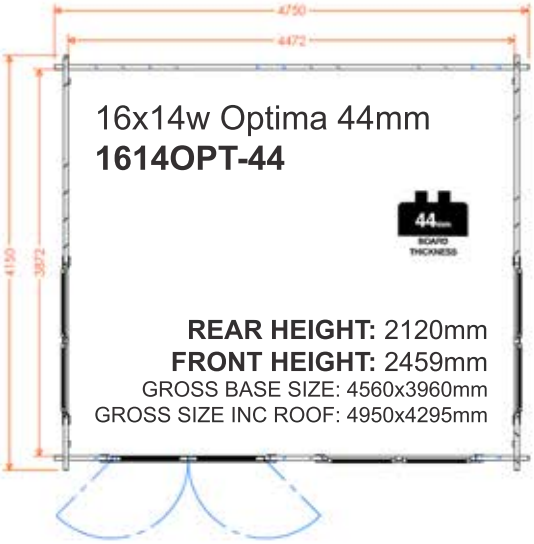

16x14w Optima 44mm
1614OPT-44

REAR HEIGHT: 2120mm
FRONT HEIGHT: 2459mm
GROSS BASE SIZE: 4560x3960mm
GROSS SIZE INC ROOF: 4950x4295mm

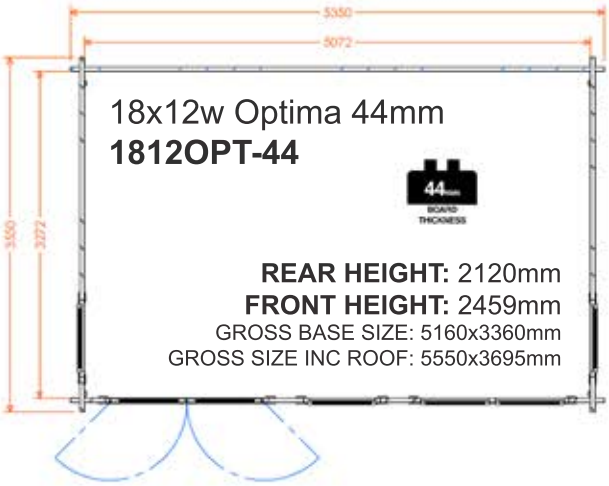

18x12w Optima 44mm
1812OPT-44

REAR HEIGHT: 2120mm
FRONT HEIGHT: 2459mm
GROSS BASE SIZE: 5160x3360mm
GROSS SIZE INC ROOF: 5550x3695mm

18x14w Optima 44mm
1814OPT-44

REAR HEIGHT: 2120mm
FRONT HEIGHT: 2459mm
GROSS BASE SIZE: 5160x3960mm
GROSS SIZE INC ROOF: 5550x4295mm