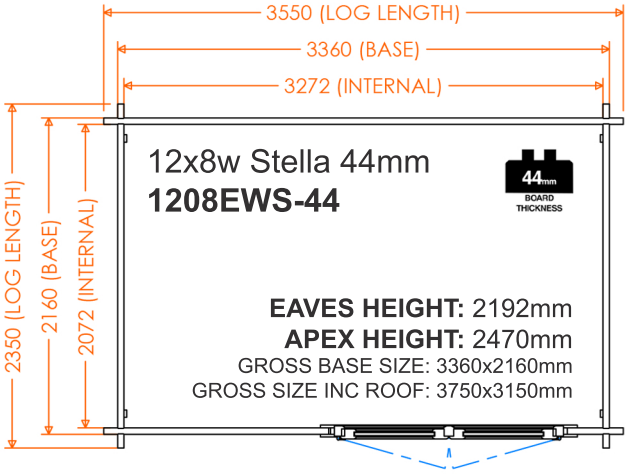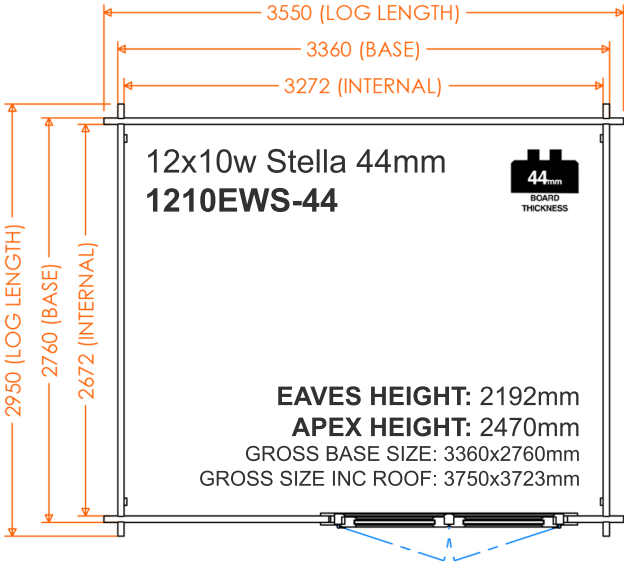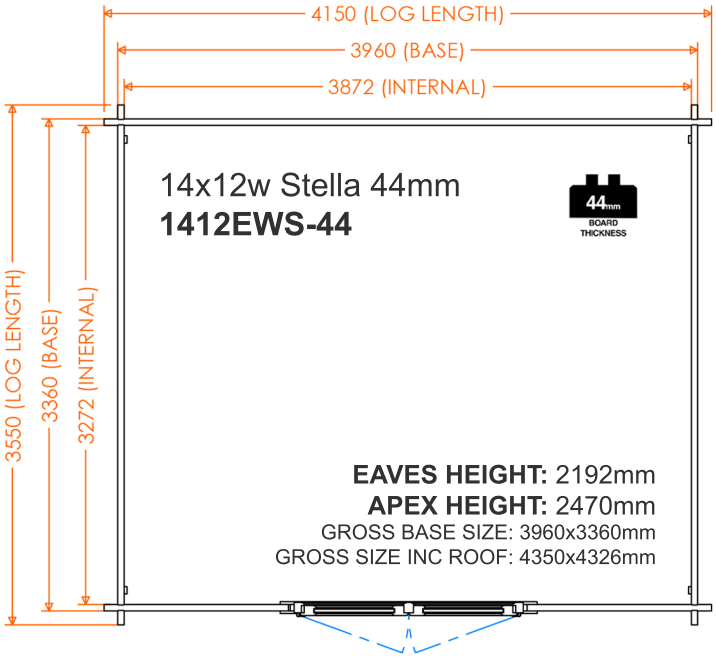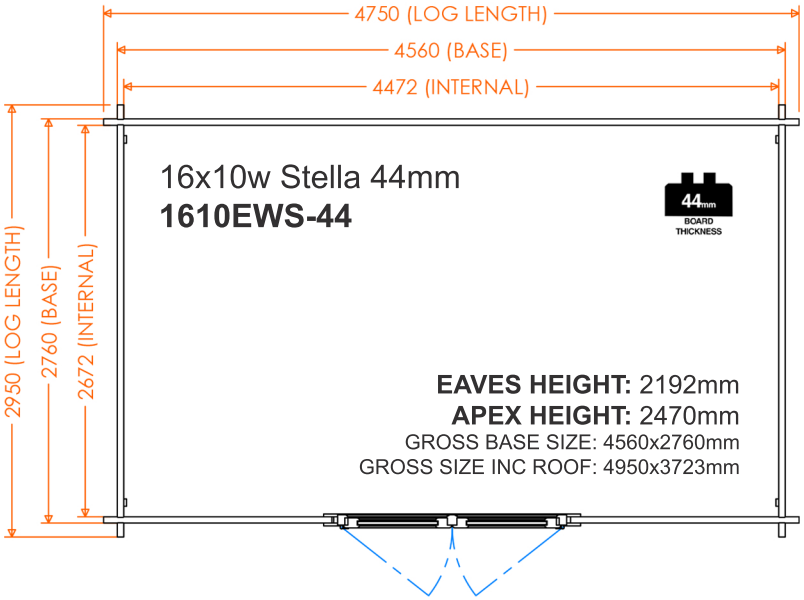Stella | 44mm Log Cabin Floorplans